TFT MODULE SPECIFICATION

RVT50HQSNWC00

STM32 EMBEDDED 5.0" DISPLAY DATASHEET

Rev.1.0
2023-05-24

ITEM	CONTENTS	UNIT
LCD Type	TFT/Transmissive/Normally Black/IPS	/
Size	5.0	Inch
Viewing Direction	Free	/
Outside Dimensions (W x H x D)	136.00 x 92.80 x 12.77	mm
Active Area (W x H)	108.00 x 64.80	mm
Pixel Pitch (W x H)	0.135 x 0.135	mm
Resolution	800 x 480	/
Brightness	800	cd/m^2
Color Depth	16.7 M	/
Pixel Arrangement	RGB Vertical Stripe	/
Micro Controller Unit	STM32U599NJH6Q or STM32U5A9NJH6Q in Mass Production 4MB Flash, 2.5MB RAM	/
External Flash Memory	512Mbit	/
Supply Voltage for Module	6.0 - 48.0	V
With/Without Touch	With Projected Capacitive Touch Panel	/
CTP Driver	ILI2132A	/
Weight	TBD	g

Note 1. RoHS3 compliant

Note 2. LCM weight tolerance: ± 5%.

1. REVISION RECORD

REV NO.	REV DATE	CONTENTS	REMARKS
1.0	2023-05-24	Initial Release	

2. CONTENTS

1. REVISION RECORD 2
2. CONTENTS 3
3. MODULE CLASSIFICATION INFORMATION 4
4. uxTouch ASSEMBLY GUIDE 5
5. MODULE DRAWING 6
6. ABSOLUTE MAXIMUM RATINGS 7
7. ELECTRICAL CHARACTERISTICS 7
8. BACKLIGHT ELECTRICAL CHARACTERISTICS 8
9. ELECTRO-OPTICAL CHARACTERISTICS 8
10. BOARD INTERFACES AND CONNECTORS 10
    - 10.1 Power input connector 10
    - 10.2 USB interface 10
    - 10.3 RS485 interface 11
    - 10.4 CAN FD interface 11
    - 10.5 SWD (Serial Wire Debug) connector 11
    - 10.6 RiBUS 12
    - 10.7 Expansion connector 13
    - 10.8 Micro SD card slot 14
    - 10.9 Battery coin cell holder 14
11. USER INTERFACES 14
    - 11.1 2 x push button 14
    - 11.2 3 x LEDs 14
12. DISPLAY SEPCIFICATION 15
    - 12.1 Full TFT specification 15
13. RELIABILITY TEST 15
14. LEGAL INFORMATION 16

3. MODULE CLASSIFICATION INFORMATION

RV	T	50	H	Q	S	N	W	C	00
1.	2.	3.	4.	5.	6.	7.	8.	9.	10.

NO.	PARAMETER	SYMBOL
1.	BRAND	RV – Riverdi
2.	PRODUCT TYPE	T – TFT Standard
3.	DISPLAY SIZE	50 – 5.0”
4.	MODEL SERIAL NO.	H – High Brightness, IPS TFT
5.	RESOLUTION	Q – 800x480 px
6.	LCD+CONTROL BOARD	S –STM32 Embedded Display MCU STM32U599NJH6Q or STM32U5A9NJH6Q
7.	FRAME	N – Without Mounting Metal Frame
8.	BACKLIGHT TYPE	W – LED White
9.	TOUCH PANEL	C – With Capacitive Touch Panel
10.	VERSION	00 – (00-99)

4. uxTouch ASSEMBLY GUIDE

uxTouch are LCD TFT displays with specially designed projected capacitive touch panels. uxTouch display can be mounted without any holed in the housing. Our standard uxTouch displays include double-sided adhesive tape (DST) to stick TFT easily to the housing. Basic series include 4.3”, 5.0”,7.0” and 10.1” display sizes.

uxTouch models with double-side adhesive tape can be mounted by connecting the glass to the housing. Riverdi recommends using support brackets assembled to display’s back. An additional support will stiffen the whole structure and minimize the influence of external factors such as vibration. Figure 1 below show examples of using support elements.

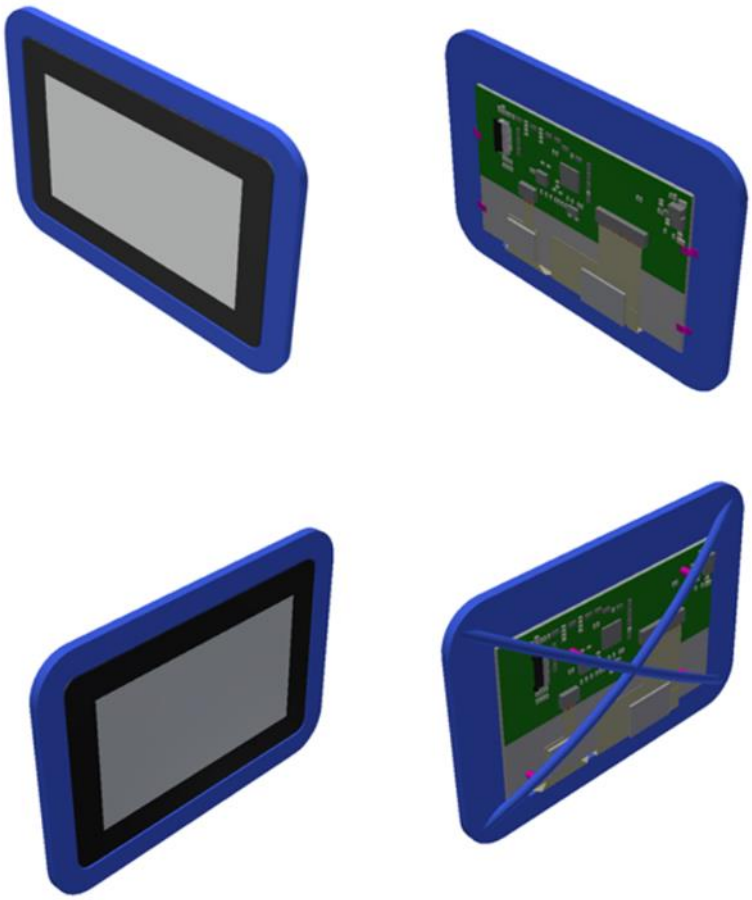

Figure 1. Example of using support brackets

Revision:	Changes:	Date:
1.0	Initial Case	2023.05.24

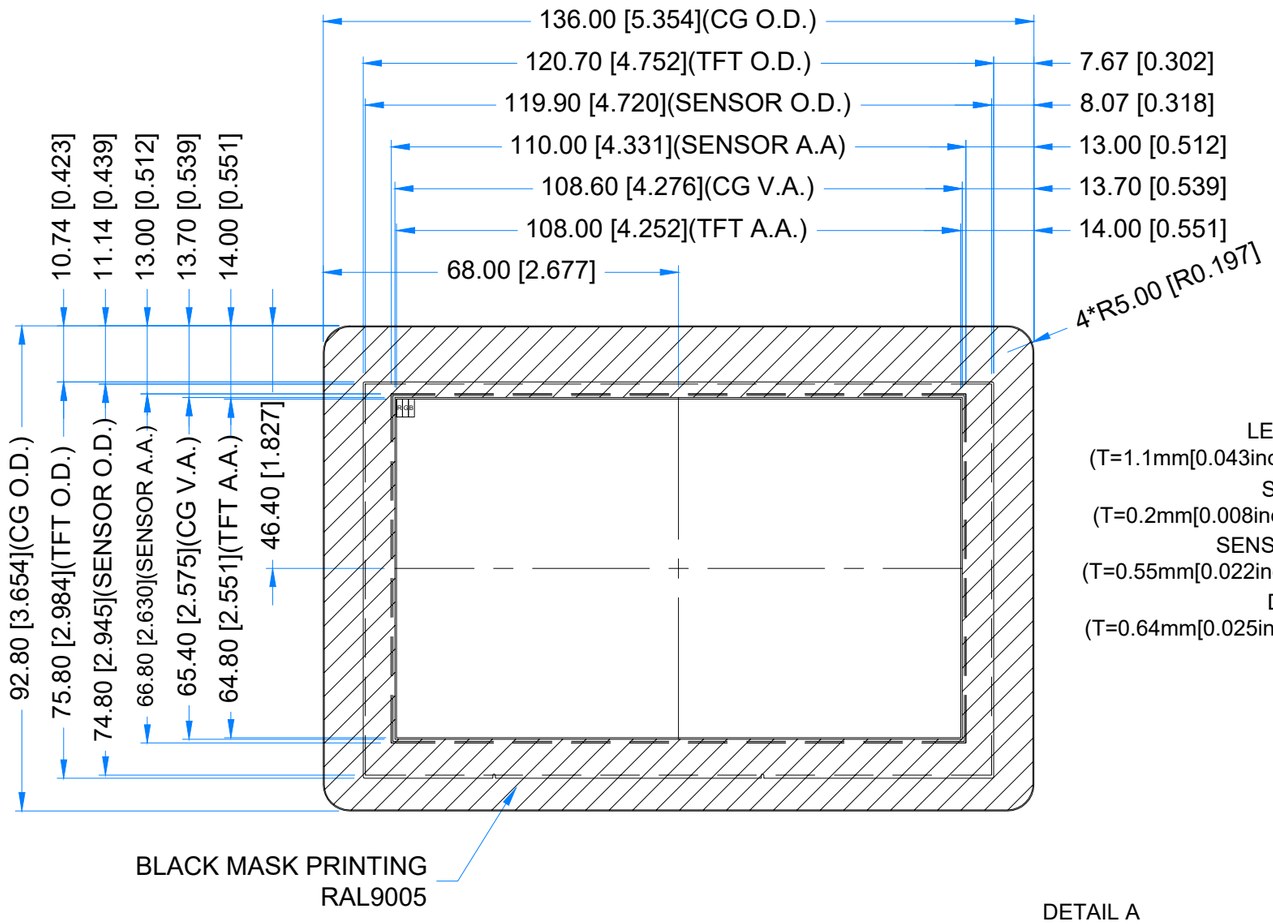

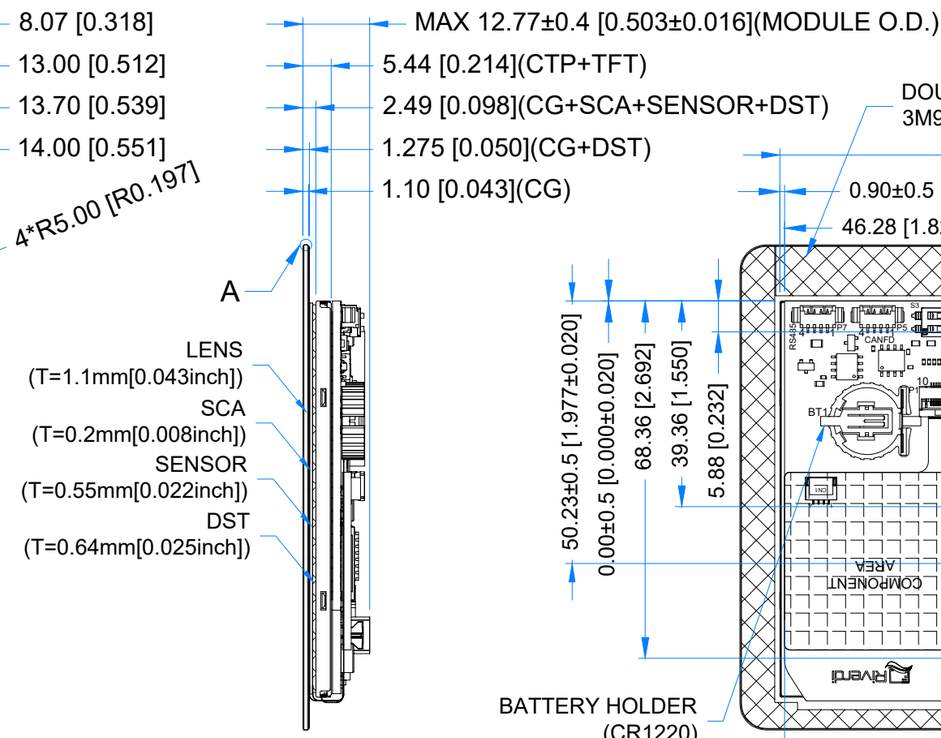

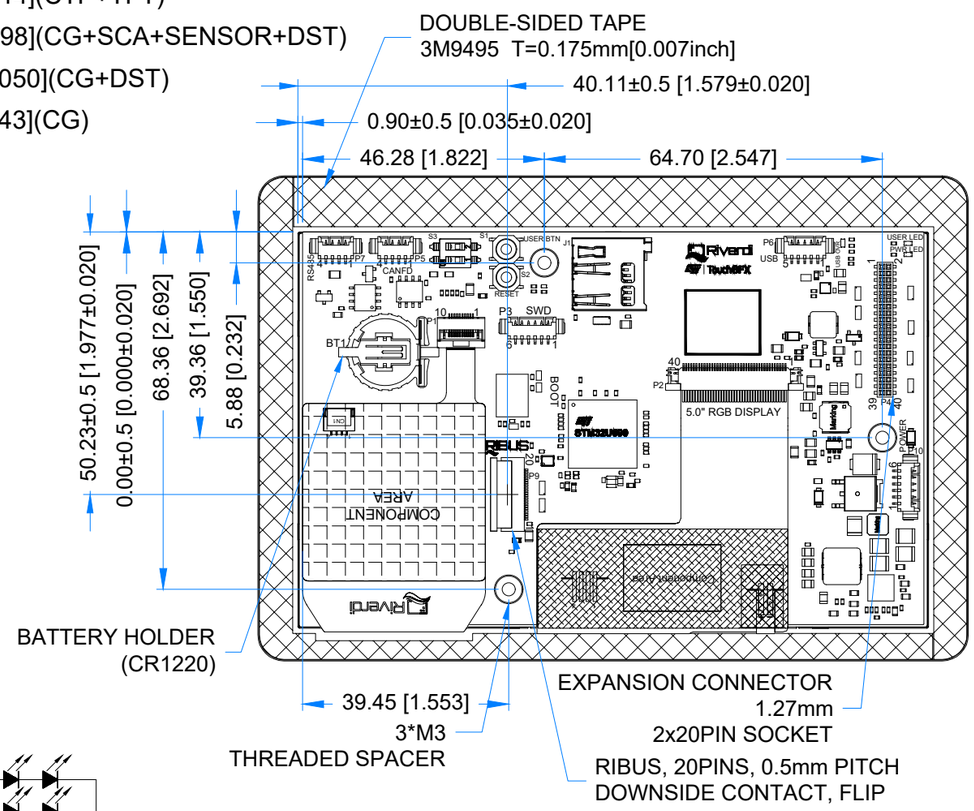

DETAIL A
SCALE 4:1

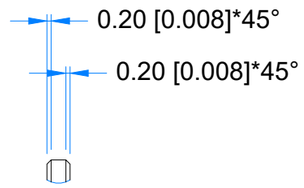

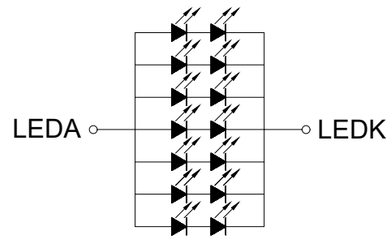

LED Circuit Diagram

1.25 MM MOLEX CONNECTORS

NO.	TYPE	MATE WITH
P3 (SWD)	53261-0671	51021-0600
P5 (CAN)	53261-0471	51021-0400
P6 (USB)	53261-0571	51021-0500
P7 (RS485)	53261-0471	51021-0400
P10 (POWER)	53261-0671	51021-0600

1.27MM PIN SOCKET

NO.	TYPE	MATE WITH
P4	CBC1402M100-2P	CH51402M100-0P OR CH51402V100

TFT NOTES:
1. DISPLAY TYPE: TRANSMISSIVE, NORMALLY BLACK, IPS
2. RESOLUTION: 800x480
3. VIEWING ANGLE: FREE
4. SURFACE LUMINANCE: 800 cd/m^2
5. MCU ON THE BOARD: STM32U599NJH6Q OR STM32U5A9NJH6Q IN MASS PRODUCTION
6. EXTERNAL FLASH MEMORY SIZE:512Mbit
7. SUPPLY VOLTAGE FOR MODULE: 6.0V - 48.0V

TP NOTES:
1. TP STRUCTURE: G+G
2. CG THICKNESS: 1.10mm[0.043inch]
3. SURFACE HARDNESS: 7H
4. DRIVER IC: ILI2132A
5. INTERFACE: CONNECTED TO MCU VIA I2C

GENERAL NOTES:
1. AIR BONDING
2. OPERATING TEMPERATURE: -20°C ~ 70°C
3. STORAGE TEMPERATURE: -30°C ~ 80°C
4. WITHOUT INDIVIDUAL TOLERANCE: ±0.3mm[0.012inch]
5. TOLERANCE OF PCB PLACEMENT: ±0.5mm[0.020inch]
6. RoHS3 COMPLIANT

PN: RVT50HQSNWC00			
SN:			
DRAWN: M.Natywa	2023.05.15	1:1.17	
CHECKED: Carol Gao	2023.05.24	[mm]	
APPR:		ISO A3	P. 1 of 1

6. ABSOLUTE MAXIMUM RATINGS

PARAMETER	SYMBOL	MIN	MAX	UNIT	NOTE
Supply Voltage for Module	VDD_IN	0.0	60.0	V	Note 1
Digital I/O signals Voltage	-	-0.5	3.3		Note 1,2
Operating Temperature	T_{OP}	-20	70	°C	
Storage Temperature	T_{ST}	-30	80	°C	
Storage Humidity (@ 25 ± 5°C)	H_{ST}	10	-	% RH	
Operating Ambient Humidity (@ 25 ± 5°C)	H_{OP}	10	-	% RH	

Note 1. Exceeding maximum values may cause improper operation or permanent damage to the unit.

Note 2. Most of the GPIOs have the 5.0 V tolerant input voltage, please refer to the datasheet of MCU for more details.

7. ELECTRICAL CHARACTERISTICS

PARAMETER	SYMBOL	MIN	TYP	MAX	UNIT
Supply Voltage for Module	VDD_IN	6.0	12.0	48.0	V
Power Enable Voltage	VEN	0	-	VDD_IN	V
Input Voltage "H" Level	V_{IH}	2.0	-	3.3	V
Input Voltage "L" Level	V_{IL}	0	-	0.8	V

PARAMETER	CONDITION	SYMBOL	1%BL	50% BL	100% BL	UNIT
Current Drawn from VDD_IN @6.0V	POWER 'ENABLE' = '0'	I_{VDD_IN}	60			uA
Current Drawn from VDD_IN @12.0V			149			
Current Drawn from VDD_IN @24.0V			388			
Current Drawn from VDD_IN @36.0V			630			
Current Drawn from VDD_IN @48.0V			872			
Current Drawn from VDD_IN @6.0V	POWER 'ENABLE' = '1'	I_{VDD_IN}	136	284	437	mA
Current Drawn from VDD_IN @12.0V			67	141	219	
Current Drawn from VDD_IN @24.0V			35	72	114	
Current Drawn from VDD_IN @36.0V			24	50	79	
Current Drawn from VDD_IN @48.0V			19	40	61	

Note 1. POWER 'ENABLE' refers to pin 4, 'ENABLE' of the power input connector(P10).
POWER 'ENABLE' = '1' is when EN pin is floating or shorted to VDD_IN.
POWER 'ENABLE' = '0' is when EN pin is shorted to GND.
By default, POWER 'ENABLE' is set to "1".

Note 2. Test condition: Ambient temp 25 °C PCAP is on Active mode.

8. BACKLIGHT ELECTRICAL CHARACTERISTICS

PARAMETER	SYMBOL	MIN	TYP	MAX	UNIT	NOTE
Lifetime	-	-	50,000	-	hours	Note 1

Note 1. Operating life means the period in which the LED brightness goes down to 50% of the initial brightness. Typical operating lifetime is the estimated parameter.

9. ELECTRO-OPTICAL CHARACTERISTICS

ITEM	SYMBOL	CONDITION	MIN	TYP	MAX	UNIT	RMK	NOTE
Response Time	Tr+Tf	θ=0° ø=0° Ta=25 °C	-	30	-	ms	FIG 2.	4
Contrast Ratio	Cr		800	1000	-	---	FIG 3.	1
Luminance Uniformity	δ WHITE		-	75	-	%		3
Surface Luminance	Lv		-	800	-	cd/m²		2
Viewing Angle Range	θ	ø = 90°	-	80	-	deg	FIG 4.	6
		ø = 270°	-	80	-			
		ø = 0°	-	80	-			
		ø = 180°	-	80	-			
CIE (x, y) Chromaticity	Rx	θ=0° ø=0° Ta=25 °C	0.575	0.615	0.655	-	FIG 3.	5
	Ry		0.296	0.336	0.376	-		
	Gx		0.352	0.392	0.432	-		
	Gy		0.512	0.552	0.592	-		
	Bx		0.100	0.140	0.180	-		
	By		0.085	0.125	0.165	-		
	Wx		0.274	0.316	0.358	-		
	Wy		0.294	0.336	0.378	-		

Note 1. Contrast Ratio (CR) is defined mathematically as below, for more information see Figure 3.

$$\text{Contrast Ratio} = \frac{\text{Average Surface Luminance with all white pixels (P1, P2, P3, P4, P5)}}{\text{Average Surface Luminance with all black pixels (P1, P2, P3, P4, P5)}}$$

Note 2. Surface luminance is the LCD surface from the surface with all pixels displaying white. For more information see Figure 3.

Lv = Average Surface Luminance with all white pixels (P1, P2, P3, P4, P5)

Note 3. The uniformity in surface luminance δ WHITE is determined by measuring luminance at each test position 1 through 5, and then dividing the minimum luminance of 5 points luminance by maximum luminance of 5 points luminance. For more information see Figure 3.

$$\delta\ \text{WHITE} = \frac{\text{Minimum Surface Luminance with all white pixels (P1, P2, P3, P4, P5)}}{\text{Maximum Surface Luminance with all white pixels (P1, P2, P3, P4, P5)}}$$

Note 4. Response time is the time required for the display to transition from white to black (Rise Time, Tr) and from black to white (Decay Time, Tf). For additional information see Figure 2. The test equipment is BM-7A.

Note 5. CIE (x, y) chromaticity, the x, y value is determined by measuring luminance at each test position 1 through 5, and then calculating the average value.

Note 6. For TFT module the contrast ratio is greater than 10. The angles are determined for the horizontal or x axis and the vertical or y axis with respect to the z axis which is normal to LCD surface. For more information see Figure 4.

Note 7. Viewing angle is measured at the center point of the LCD by CONOSCOPE (ergo-80). For response time testing, the testing data is based on BM-7A. Instruments for Contrast Ratio, Surface Luminance, Luminance Uniformity, Chromaticity the test data is based on SR-3A.

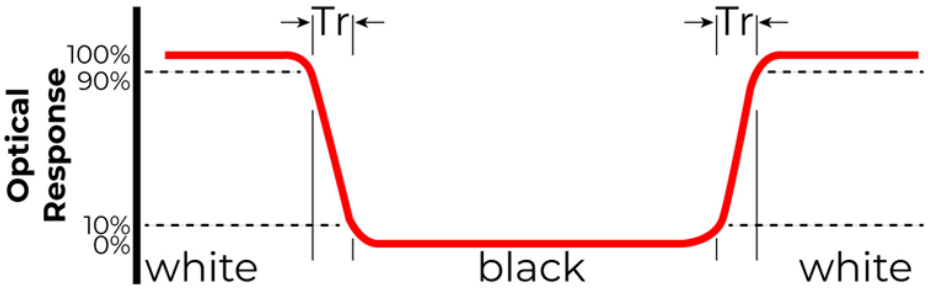

Figure 2. The definition of response time

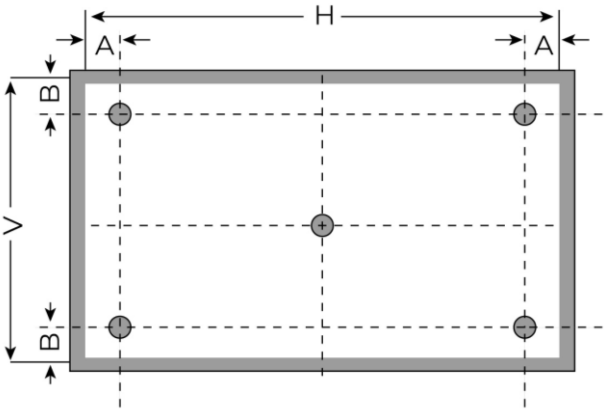

A: 5mm

B: 5mm

H, V: Active Area

Light spot size ⌀=5mm, 500mm distance from the LCD surface to detector lens.

Measurement instrument is TOPCON'S luminance meter BM-5

Figure 3. Measuring method for Contrast ratio, surface luminance, Luminance uniformity, CIE (x, y) chromaticity

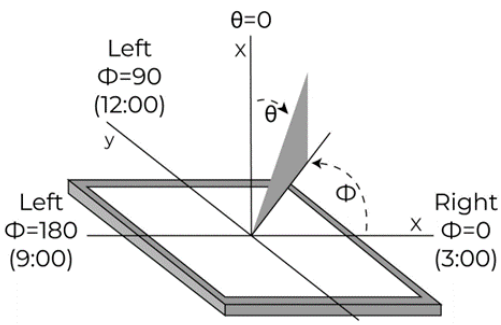

Figure 4. The definition of viewing angle

10. BOARD INTERFACES AND CONNECTORS

10.1 Power input connector

The 1.25mm, 6-pin Molex connector labeled as “POWER’ (P10) is power input connector.

There is an internal reverse polarity protection which ensures that the device is not damaged if the power supply polarity is reversed.

NO.	PIN	DESCRIPTION	NOTE
1	VDD_IN	Power supply input; 6.0-48.0V	Note 1
2	VDD_IN	Power supply input; 6.0-48.0V	
3	VDD_IN	Power supply input; 6.0-48.0V	
4	ENABLE	Enable/ Disable power supply	Note 2
5	GND	Ground	
6	GND	Ground	

Note 1. The STM32 Embedded Display system allows for the direct connection of an additional display through the RiBUS connector on the board. You can connect any intelligent display from Riverdi based on EVE4 (BT817Q). Please see chapter 10.6 for detailed info.

Note 2. The "ENABLE" pin is internally pulled up to VDD_IN.

To enable the device, please leave the EN pin unconnected or short it to the "VDD_IN" pin.

To disable the device, short the EN pin to GND.

Note 3. Matched Riverdi power supply cable: RVA-0106M-1.25FF-1.

10.2 USB interface

The 1.25mm, 5-pin Molex connector labeled as “USB’ (P6) is USB interface.

NO.	PIN	DESCRIPTION	NOTE
1	VCC_USB	Power supply	Note 1
2	D-	USB data-	
3	D+	USB data+	
4	ID	USB OTG ID; Host /Device detect	Note 2
5	GND	Ground	

Note 1. The maximum current drawn from VCC_USB is 500mA.

Note 2. Configuration of the USB Host/Device mode:

Host Mode: Pin 4 (ID) should be connected to GND.

In this mode, it can provide +5V output voltage to the connected USB device and Max output current 500 mA.

Device Mode: Pin 4 (ID) should be not connected (floating).

Note 3. Matched Riverdi cable accessory: RVA-0105M-1.25FF

10.3 RS485 interface

The 1.25mm, 4-pin Molex connector labeled as "RS485' (P7) is RS485 interface.

NO.	PIN	DESCRIPTION	NOTE
1	VDD_IN	Power supply input; 6.0-48.0V	
2	A	Non-inverting receiver input and non-inverting driver output	
3	B	Inverting receiver input and inverting driver output	
4	GND	Ground	

Note 1. The termination resistor R18 (120 ohms) is mounted.

Note 2. Matched Riverdi cable accessory: RVA-0104M-1.25FF.

10.4 CAN FD interface

The 1.25mm, 4-pin Molex connector labeled as 'CANFD'(P5) is CANFD (Control Area Network Flexible Data-Rate) communication bus, based on the high-speed (2.5-8.0Mbps) CAN transceiver.

NO.	PIN	DESCRIPTION	NOTE
1	GND	Ground	
2	CAN_L	CAN Low-Level Voltage	
3	CAN_H	CAN High-Level Voltage	
4	VDD_IN	Power supply input; 6.0 – 48.0V	

Note 1. Termination resistors R35,R36 (both 60R) are mounted. Dip switch S3 is used to enable and disable the termination resistors.

Enable: Set 1&2 to ON **Disable**: Set 1&2 to OFF

Note 2. Matched Riverdi cable accessory: RVA-0104M-1.25FF

10.5 SWD (Serial Wire Debug) connector

The 1.25mm, 6-pin Molex connector labeled as 'SWD' (P3) is SWD interface, which is used for programing the MCU on board.

NO.	PIN	DESCRIPTION	NOTE
1	VCC_+3.3V	Power input	
2	SW_CLK	Serial wire clock	
3	GND	Ground	
4	SW_DIO	Serial wire debug data input/output	
5	RST	Reset; Active low	
6	SWO	Serial wire trace output	

Note 1. Compatible ST-LINK programmer: ST-LINK/V2, ST-LINK/V2-ISOL, ST-LINK/V3

Note 2. To program the board with ST-LINK/V2-ISOL, please use RVA-SWD-06M-C100 V2

10.6 RiBUS

Any size of the Riverdi EVE4 series display can be connected through RiBUS to act as a slave module to the mainboard.

NO.	PIN	DESCRIPTION	NOTE
1	VCC_+3.3V	Supply voltage for module; TYP3.3V	
2	GND	Ground	
3	SPI_SCLK	SPI SCK signal	
4	MISO/ IO.1	SPI MISO signal / SPI Quad mode: SPI data line 1	
5	MOSI/ IO.0	SPI MOSI signal / SPI Quad mode: SPI data line 0	
6	CS	SPI chips select signal	
7	INT	Interrupt signal from device to the system, Active Low	
8	RST/PD	Reset / Power down signal, Active Low,	
9	GPIO.0	GPIO.0	
10	DISP_AUDIO	Display audio in/out	
11	GPIO.1/IO.2	SPI Single/Dual mode: General purpose IO0. QSPI mode: SPI data line 2	
12	GPIO.2/IO.3	SPI Single/Dual mode: General purpose IO1. QSPI mode: SPI data line 3	
13	NC	Not connected	
14	NC	Not connected	
15	NC	Not connected	
16	NC	Not connected	
17	BLVDD	Supply voltage for backlight	Note 2
18	BLVDD	Supply voltage for backlight	
19	BLGND	Backlight Ground, internally connected to GND	
20	BLGND	Backlight Ground, internally connected to GND	

Note 1. Matched Riverdi FFC accessory for RiBUS: FFC0520150

Note 2. If any of the Riverdi EVE4 display series (3.5", 4.3", 5.0", or 7.0") is connected through RiBUS, the power supply voltage VDD_IN should be between 6.0V-48.0V. To set up the backlight voltage (BLVDD) at 5.0V, short the pads of the solder bridge labeled 'BLVDD INT'.

If any of the Riverdi EVE4 10.1" display series is connected through RiBUS, the power supply voltage VDD_IN must range between 7.0V-14.0V. To set up the backlight voltage (BLVDD) between 7.0V-14.0V, short the pads of the solder bridge labeled 'BLVDD EXT'

10.7 Expansion connector

The main board has one 1.27mm, 40-pin expansion pin socket which is labeled as P4 is "EXPANSION CONNECTOR".

It provides direct access to below GPIOs of MCU, which make it possible to easily extend a daughterboard for a specific application.

- 2 x I²C
- 1 x UART
- 1 x USART
- 1 x SPI
- 1 x USB
- 7 x PWMs
- 1 x DAC(Digital-to-analog)
- 2 x ADCs (Analog-to-digital)

Each of the GPIO pins can be configured by software as output (push-pull or open-drain, with or without pull-up or pull-down), as input (floating, with or without pull-up or pull-down) or as peripheral alternate function. Most of the GPIO pins are shared with digital or analog alternate functions. Please refer to the datasheet of MCU for more details.

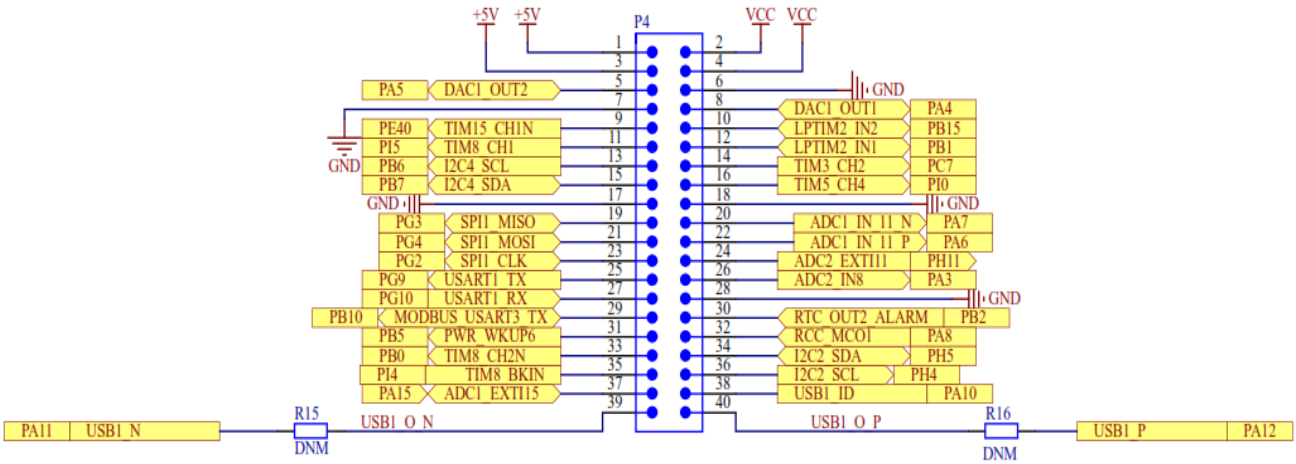

I/O/P	PIN NAME	NO.	NO.	PIN NAME	I/O/P
P	VCC_+5V	1	2	VCC_+3.3V	P
P	VCC_+5V	3	4	VCC_+3.3V	P
I/O	PA5	5	6	GND	P
P	GND	7	8	PA4	I/O
I/O	PE40	9	10	PB15	I/O
I/O	P15	11	12	PB1	I/O
I/O	PB6	13	14	PC7	I/O
I/O	PB7	15	16	P10	I/O
P	GND	17	18	GND	P
I/O	PG3	19	20	PA7	I/O
I/O	PG4	21	22	PA6	I/O
I/O	PG2	23	24	PH11	I/O
I/O	PG9	25	26	PA3	I/O

I/O	PG10	27	28	GND	P
I/O	PB10	29	30	PB2	I/O
I/O	PB5	31	32	PA8	I/O
I/O	PB0	33	34	PH5	I/O
I/O	P14	35	36	PH4	I/O
I/O	PA15	37	38	PA10	I/O
I/O	PA11	39	40	PA12	I/O

Note 1. The total output current I@5.0V from pin 1 and pin3 is maximum 1A.

The total output current I@3.3V from pin 2 and pin 4 is maximum 500mA.

10.8 Micro SD card slot

The mainboard is equipped with Micro-SD slot, which supports all types of Micro SD cards.

10.9 Battery coin cell holder

The battery coin cell, labeled as BT1, is suitable for CR1220 (Ø12.5 x 2.0mm) Coin Cell Batteries.

The BT1 is connected to the VBAT pin of MCU, which allows to retain the content of the backup registers, SRAM to keep running RTC when the VDD_IN is turned off and unplugged.

11. USER INTERFACES

11.1 2 x push button

Push button labeled as 'RST' (S2) is used to reset the module.

Another 1 push button labeled as 'USR BTN' is for user's development.

- USR BTN(S1) is connected to GPIO, PJ3, of the MCU.

11.2 3 x LEDs

1 x LED, labeled as 'PWR LED', emits green light when the modules is powered.

1 x LED, labeled as 'USB OVR', emits red light when VCC_USB pin overcurrent occurs.

1 x LED, labeled as 'USR LED', is for user's development.

- The 'USR LED' is connected to GPIO, PE5, of the MCU.

12. DISPLAY SEPCIFICATION

12.1 Full TFT specification

The TFT of the module applies Riverdi high brightness, IPS, 5.0” RGB TFT: RVT50HQTNWC00

For detailed information, please refer to datasheet of display.

13. RELIABILITY TEST

NO.	TEST ITEM	TEST CONDITION	NOTE
1	High Temperature Storage	80°C/120 hours	Note 1
2	Low Temperature Storage	-30°C/120 hours	
3	High Temperature Operating	70 °C /120 hours	
4	Low Temperature Operating	-20°C/120 hours	
5	High Temperature and High Humidity	Humidity 40℃, 90%RH, 120Hrs	
6	Thermal Cycling Test (No operation)	-20℃ for 30mins, 70℃ for 30 mins. 100 cycles. Then test at room temperature after 1 hour	Note 2
7	Vibration Test	Frequency: 10 ÷ 55 Hz. Stroke: 1.5 mm. Sweep: 10Hz ÷ 55Hz ÷ 10 Hz. 2 hours for each direction of X, Y, Z (Total 6 hours)	
8	Package Drop Test	Height: 60 cm 1 corner, 3 edges, 6 surfaces	

Note 1. Sample quantity for each test item is 5 ÷ 10 pcs.
Note 2. Before cosmetic and function test, the product must have enough recovery time, at least 2 hours at room temperature.

14. LEGAL INFORMATION

CE marking is usually obligatory only for a complete end product. Riverdi display modules are semi-finished goods which are used as inputs to become part of the finished products.

Therefore, Riverdi display modules are not CE marked.

Riverdi grants the guarantee for the proper operation of the goods for a period of 12 months from the date of possession of the goods. If in a consequence of this guaranteed execution the customer has received the defects-free item as replacement for the defective item, the effectiveness period of this guarantee shall start anew from the moment the customer receives the defects-free item.

Information about device is the property of Riverdi and may be the subject of patents pending or granted. It is not allowed to copy or disclosed this document without prior written permission.

Riverdi endeavors to ensure that all contained information in this document is correct but does not accept liability for any error or omission. Riverdi products are in developing process and published information may be not up to date. Riverdi reserves the right to update and makes changes to Specifications or written material without prior notice at any time. It is important to check the current position with Riverdi.

Images and graphics used in this document are only for illustrative the purpose. All images and graphics are possible to be displayed on the range products of Riverdi, however the quality may vary. Riverdi is no liable to the buyer or to any third party for any indirect, incidental, special, consequential, punitive, or exemplary damages (including without limitation lost profits, lost savings, or loss of business opportunity) relating to any product, service provided or to be provided by Riverdi, or the use or inability to use the same, even if Riverdi has been advised of the possibility of such damages.

Riverdi products are not fault tolerant nor designed, manufactured or intended for use or resale as on line control equipment in hazardous environments requiring fail–safe performance, such as in the operation of nuclear facilities, aircraft navigation or communication systems, air traffic control, direct life support machines or weapons systems in which the failure of the product could lead directly to death, personal injury or severe physical or environmental damage ('High-Risk Activities'). Riverdi and its suppliers specifically disclaim any expressed or implied warranty of fitness for High-Risk Activities. Using Riverdi products and devices in 'High-Risk Activities' and in any other application is entirely at the buyer's risk, and the buyer agrees to defend, indemnify, and hold harmless Riverdi from all damages, claims or expenses resulting from such use. No licenses are conveyed, implicitly or otherwise, under any Riverdi intellectual property rights.

Hi, I am here to help you!
If you have any additional questions, please contact our support via email:
contact@riverdi.com

Mouser Electronics

Authorized Distributor

Click to View Pricing, Inventory, Delivery & Lifecycle Information:

Riverdi:

RVT50HQSNWC00 SM-RVT50HQSNWC00