Jan.1.2026 Copyright 2026 HIROSE ELECTRIC CO., LTD. All Rights Reserved.
In case of consideration for using Automotive equipment / device which demand high reliability, kindly contact our sales window correspondents.

	COUNT	DESCRIPTION OF REVISIONS	BY	CHKD	DATE		COUNT	DESCRIPTION OF REVISIONS	BY	CHKD	DATE
△					. .	△					. .
△					. .	△					. .
△					. .	△					. .

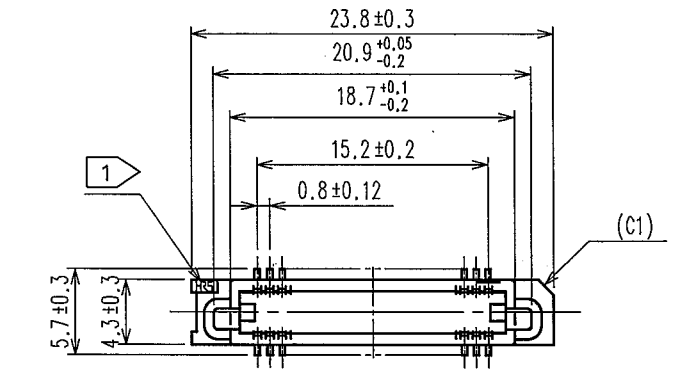

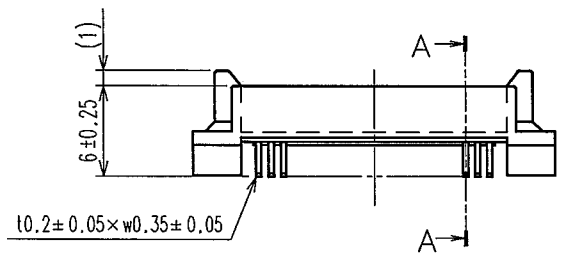

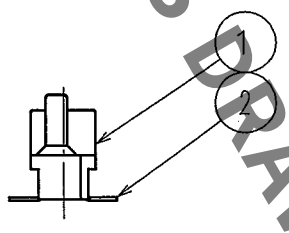

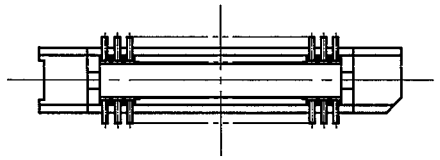

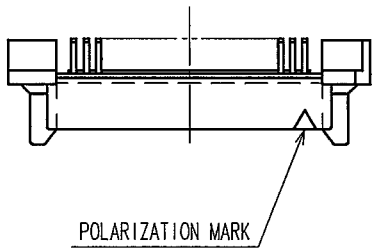

A-A(10:1)

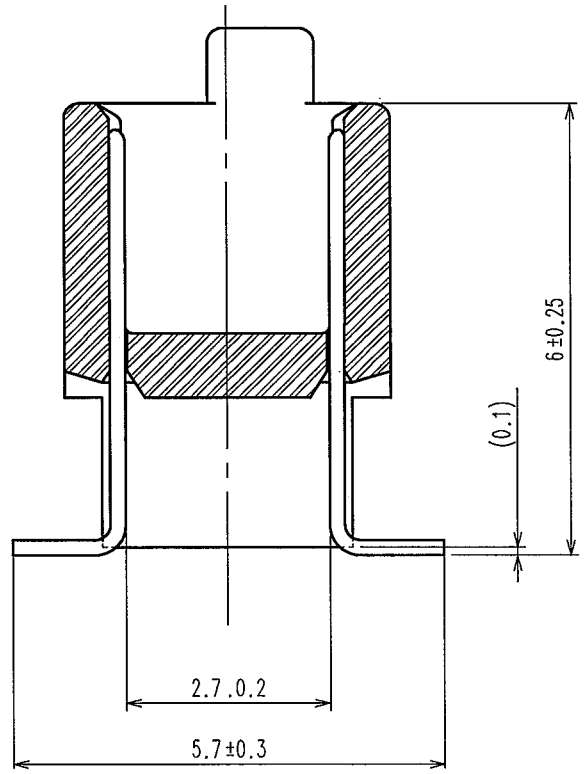

NOTE 1 HRS MARK SHALL BE OPTIONAL.
2 LEAD CO-PLANARITY SHALL BE 0.1mm MAX.
3 THE DIMENSIONS IN PARENTHESES ARE FOR REFERENCE.
4 EMBOSSED CARRIER TAPE PACKAGING SHALL BE APPLIED FOR THIS PRODUCT.
5 FOR MODIFICATION,ETC,PREVENTIVE HOLE FOR SINK MARK MAY BE ADDED ACCORDING TO CIRCUMSTANCES.

HRS DRAWING FOR REFERENCE

RECOMMENDED P.C.B.LAND PATTERN(MOUNT SIDE)

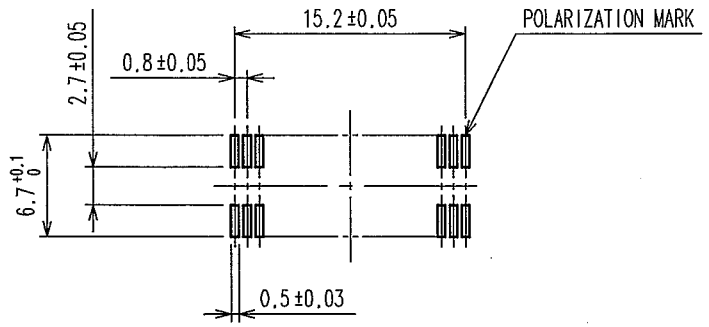

TO

NO.	MATERIAL	FINISH, REMARKS	NO.	MATERIAL	FINISH, REMARKS
1	POLYPHENYLENE SULFIDE	LIGHT BROWN UL94V-0	2	PHOSPHOR BRONZE	CONTACT AREA : GOLD 0.1μm min. LEAD AREA : TIN-PLATING 1μm min. UNDER PLATING : NICKEL 1μm min.

CODE NO.(OLD)	DRAWN	DESIGNED	CHECKED	APPROVED	RELEASED
CL	Y.AOYAGI 05.09.27	J.Noda '05.09.27	H.Ozawa '05.09.27	H.Okawa '05.09.27	. .

SCALE 2 : 1	DRAWING NO. EDC3-071321-22	PART NO. FX6A-40P-0.8SV2(92)
UNITS mm	HRS HIROSE ELECTRIC CO., LTD	CODE NO. CL576-0243-2-92 1/2

Jan.1.2026 Copyright 2026 HIROSE ELECTRIC CO., LTD. All Rights Reserved.
In case of consideration for using Automotive equipment / device which demand high reliability, kindly contact our sales window correspondents.

	COUNT	DESCRIPTION OF REVISIONS	BY	CHKD	DATE		COUNT	DESCRIPTION OF REVISIONS	BY	CHKD	DATE
△					. .	△					. .
△					. .	△					. .
△					. .	△					. .

DIRECTION OF UNREELING

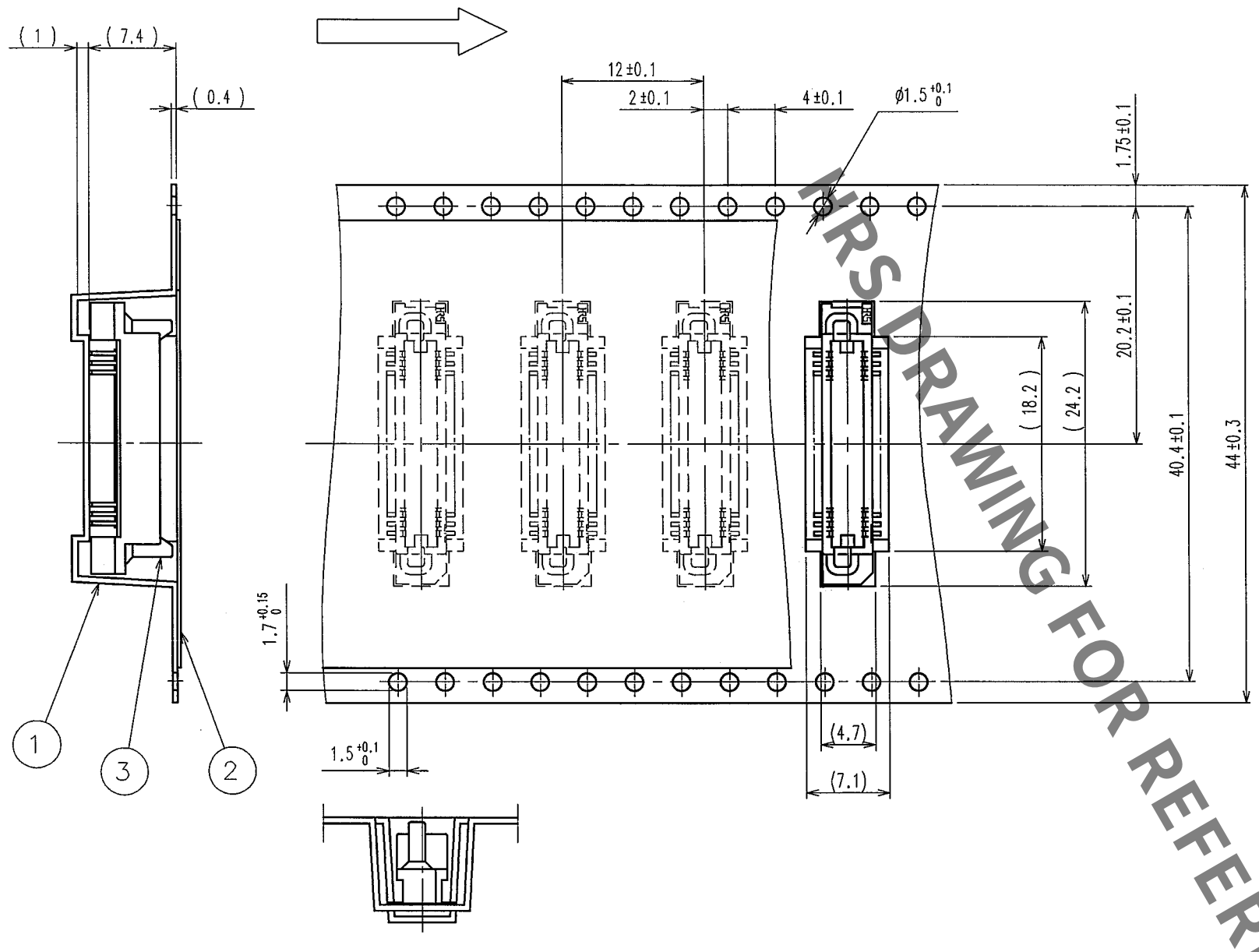

STYLE AND DIMENSION OF REEL(FREE)

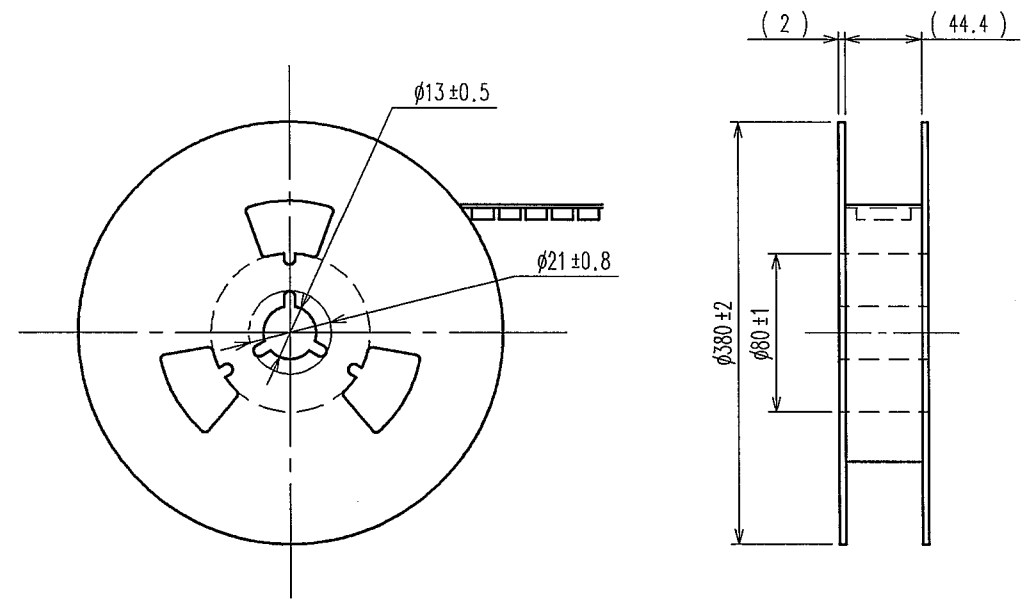

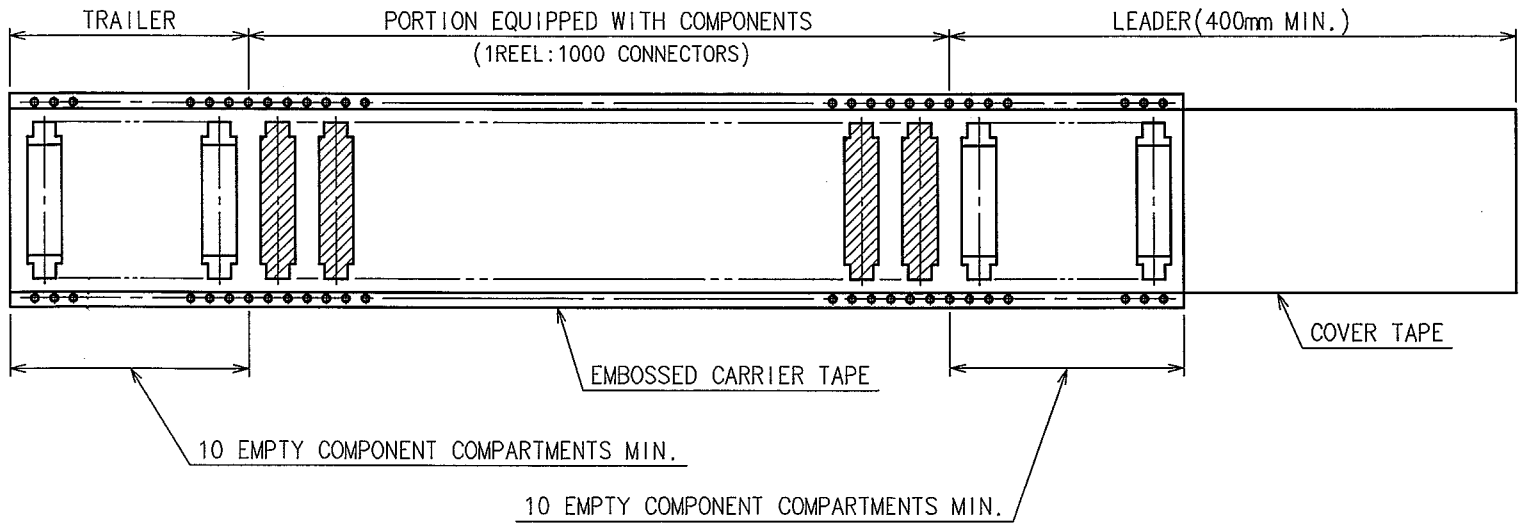

HRS DRAWING FOR REFERENCE

NOTE 1 THE DIMENSIONS IN PARENTHESES ARE FOR REFERENCE.
2 1REEL:1000 CONNECTORS.

NO.	MATERIAL	FINISH, REMARKS	NO.	MATERIAL	FINISH, REMARKS
2	POLYESTER	COVER TAPE			
1	POLYSTYRENE	EMBOSSED CARRIER TAPE	3		(CONNECTOR)

CODE NO.(OLD)	DRAWN	DESIGNED	CHECKED	APPROVED	RELEASED
CL	Y.AOYAGI '05.09.27	J.Noda '05.09.27	K.Ozawa '05.09.27	H.Okawa '05.09.27	. .

SCALE 2 : 1	DRAWING NO. EDC3-071321-22	PART NO. FX6A-40P-0.8SV2(92)
UNITS mm	HRS HIROSE ELECTRIC CO., LTD	CODE NO. CL576-0243-2-92 2

TO

FORM NO.229